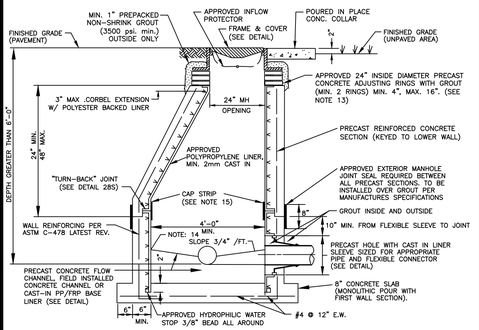

NOTES:

1. PRECAST CONCRETE TYPE II 4000 P.S.I. CALCAREOUS AGGREGATE REQUIRED (MIN. CaCO3 CONTENT: 65% IN LARGE AGGREGATE, 50% IN CONCRETE SCREENING).
2. APPROVED PRIMER AND SEALANT GASKET AT ALL RISER JOINTS. SEALANT GASKET SIZE AND PLACEMENT SHALL BE CALLED OUT ON SHOP DRAWINGS. PRIMER TO BE APPLIED BY THE PRECASTER (TONGUE SECTION ONLY).
3. ALL PIPE OPENINGS SHALL BE GAS TIGHT AND WATER TIGHT WITH NO EXPOSED CONCRETE SURFACES.
4. CAST OPENINGS SHALL BE MANUFACTURED WITH A POLYPROPYLENE SLEEVE CAST IN. APPROVED FLEXIBLE MANHOLE CONNECTORS SHALL BE USED AT PIPE CONNECTIONS. HOLE SIZE PER BOOT MANUFACTURER'S SPECIFICATIONS. DOUBLE PIPE CLAMPS MUST BE INSTALLED ON FLEXIBLE SLEEVES WHERE REQUIRED BY BOOT MANUFACTURERS INSTALLATION INSTRUCTIONS.
5. CORED PIPE OPENINGS SHALL BE INSTALLED PER DETAIL. APPROVED FLEXIBLE CONNECTOR WILL BE INSTALLED ONTO POLY-PROPYLENE WALL SLEEVE. WALL SLEEVE SHALL BE EPOXIED INTO CORED OPENING AND THERMAL WELDED TO WALL LINER.
6. FLOW CHANNELS SHALL BE CONSTRUCTED TO DIRECT INFLUENT INTO FLOW STREAM. APPROVED CAST-IN PP/FRP BASE LINER IS ACCEPTABLE (SEE DETAIL).
7. LIFT HOLES ARE PERMITTED.
8. INSIDE DROPS SHALL NOT BE DESIGNED TO EXCEED 1.80 FEET AND NOT CONSTRUCTED TO EXCEED 2.0 FEET. MAX. 6" INSIDE DROP IS PERMITTED FOR MANHOLES WITH 3 OR MORE INVERTS AND MANHOLES WITH A CHANGE IN FLOW DIRECTION OF MORE THAN 45 DEGREES.
9. MANHOLE FABRICATION SHALL BE IN ACCORDANCE WITH ASTM C-478, LATEST STANDARD.
10. MINIMUM 5 FEET IS REQUIRED BETWEEN OUTSIDE OF MANHOLE AND SERVICE WYE OR ANY PIPE JOINT.
11. ONLY APPROVED THERMOPLASTIC LINER SYSTEM SHALL BE USED. LINERS MUST BE WELDED BY LINER MFG CERTIFIED WELDERS AND BE CAST INTO THE MANHOLE BY A LINER MANUFACTURER CERTIFIED PRECASTER.
12. APPROVED INFLOW PROTECTORS ARE REQUIRED.
13. MAXIMUM HEIGHT OF CHIMNEY SHALL NOT EXCEED 24" (INCLUDING FRAME CASTING).
14. SEAL INVERT BENCH AND CHANNEL TO WALL LINER WITH 3M WEATHERBAN 5354 SEALANT TAPE OR APPROVED EQUAL.
15. MIN. 4" WIDE FIELD WELDED CAP STRIP IS REQUIRED FOR ALL JOINTS.
16. SOLID THERMOPLASTIC CAST-IN LINER IS REQUIRED FOR LAST MANHOLE PRIOR TO LIFT STATION. MANHOLES DEEPER THAN 14 FT., MANHOLES WITH OUTSIDE DROP, AND MANHOLES WITH A FORCE MAIN CONNECTION. (SEE APPROPRIATE DETAILS)
17. MANHOLES IN ROADWAYS SHALL BE LOCATED OUTSIDE OF WHEEL PATHS.

STANDARD MANHOLE WITH CAST-IN LINER 18S

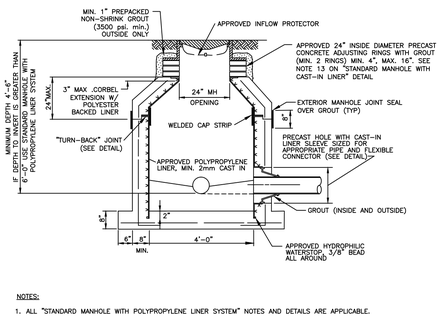

NOTES:

1. ALL "STANDARD MANHOLE WITH POLYPROPYLENE LINER SYSTEM" NOTES AND DETAILS ARE APPLICABLE.
2. SEAL INVERT BENCH AND CHANNEL TO WALL LINER WITH 3M WEATHERBAN 5354 SEALANT TAPE (OR APPROVED EQUAL).
3. SEE SEPARATE DETAIL FOR OPTIONAL CAST-IN POLYPROPYLENE OR FIBER REINFORCED POLYMER BASE LINER.

SHALLOW MANHOLE WITH CAST-IN LINER 19S

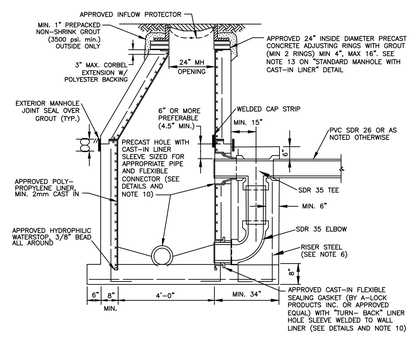

NOTES:

1. ALL DETAILS AND SPECIFICATIONS FOR "STANDARD MANHOLE WITH SOLID POLYPROPYLENE LINER SYSTEM" ARE APPLICABLE EXCEPT FOR REFERENCES TO DROP ASSEMBLY.
2. THE PRECAST BASE SHALL EXTEND FULLY UNDER THE DROP ASSEMBLY.
3. PRECAST DROP ENCASEMENT REQUIRED UP TO TOP EDGE OF 90 DEGREE ELBOW, BRICK AND CONCRETE RUBBLE ARE PERMITTED AS FILLER IN REMAINDER OF DROP ENCASEMENT.
4. DROP CONNECTIONS SHALL BE REQUIRED WHENEVER AN INFLUENT INVERT IS LOCATED 2.0 FEET OR MORE ABOVE THE MAIN INVERT CHANNEL. DROP CONNECTIONS SHOULD NOT BE DESIGNED FOR LESS THAN A 2.4 FOOT DROP.
5. PVC SDR 26 PIPE WITH PVC SDR 35 FITTINGS SHALL BE UTILIZED IN THE DROP ASSEMBLY.
6. DROP ENCASEMENT REINFORCING STEEL TO BE CAST IN PLACE WITH BASE (4 RODS) OR USE 4-1/2" DIA. COIL LOOP INSERTS CAST IN PLACE WITH BASE (TO BE USED WITH 1/2" COIL RODS). COIL LOOP INSERTS TO BE "DAYTON SUPEROR" B16, 1/2"X 4" OR APPROVED EQUAL.
7. MIN. 4" WIDE FIELD WELDED CAP STRIP IS REQUIRED OVER ALL JOINTS.
8. SEAL INVERT BENCH AND CHANNEL TO WALL LINER WITH 3M WEATHERBAN 5354 SEALANT TAPE (OR APPROVED EQUAL).
9. SEE SEPARATE DETAIL FOR OPTIONAL CAST-IN POLYPROPYLENE OR FIBER REINFORCED POLYMER BASE LINER.

OUTSIDE DROP MANHOLE WITH CAST-IN LINER 20S

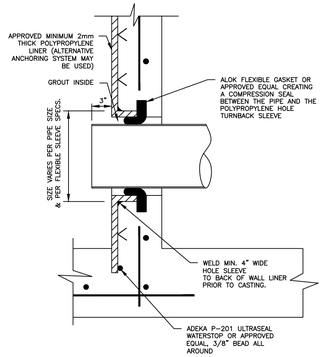

PIPE TO DROP MANHOLE CONNECTION LOWER INVERT 25S

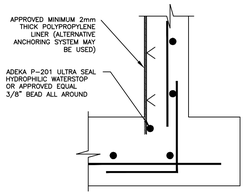

NOTE:

THIS STYLE WATERSTOP IS USED ON STRUCTURES CAST WITH A MONOLITHICALLY POURED BOTTOM SLAB.

BASE MANHOLE SECTION WATERSTOP DETAIL 26S

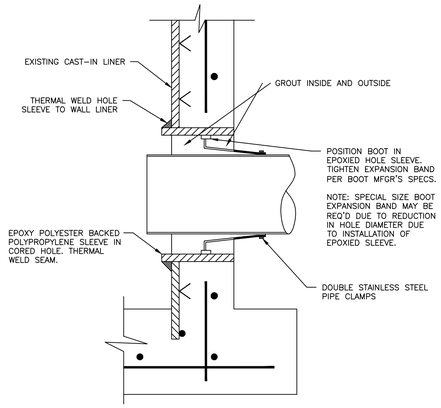

NOTE:
THERMAL WELDING AND EPOXY OF THE SLEEVE TO BE PERFORMED BY A CONTRACTOR CERTIFIED BY THE LINER MANUFACTURER

CORED HOLE W/FLEX. CONNECTOR & TURNBACK SLEEVE POLYPROPYLENE LINER SYSTEM CAST-IN 24S

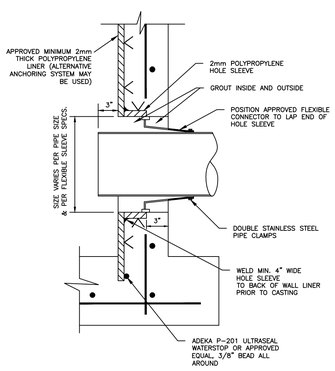

PIPE TO MANHOLE CONNECTION – TYPE "A" 21S

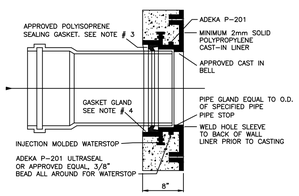

INSTALLATION:
1) CLEAN BELL
2) INSTALL GASKET AS SHOWN
3) LUBRICATE PIPE SPIGOT AND SLIDE INTO BELL AND GASKET UNTIL REACHING PIPESTOP
4) CHECK FOR WATERTIGHT CONNECTION

DO NOT LUBRICATE THE GASKET OR THE BELL

NOTES:
1) MANHOLE SHOP DRAWINGS SHALL IDENTIFY THE TYPE OF MANHOLE/PIPE CONNECTION.
2) MANHOLE SHOP DRAWINGS SHALL IDENTIFY THE PIPE SIZE, TYPE, GASKET TYPE, AND HOLE SIZE.
3) ONLY THE POLYISOPRENE GASKET SUPPLIED BY THE BELL MANUFACTURER SHALL BE USED IN COMPRESSION TYPE BELLS.
4) GASKET GLAND VARIES ACCORDING TO PIPE SIZE AND TYPE.
5) HOLE SLEEVES AND BELL CONNECTORS SHALL EXTEND TO THE OUTER PROFILE OF THE CONCRETE STRUCTURE AT MINIMUM PROVIDING A COMPLETELY LINED SURFACE WHERE THE GASKET AND HOLE LINER MATE TOGETHER.

CAST-IN BELL WITH COMPRESSION SEAL GASKET

PIPE TO MANHOLE CONNECTION – TYPE "B" 22S

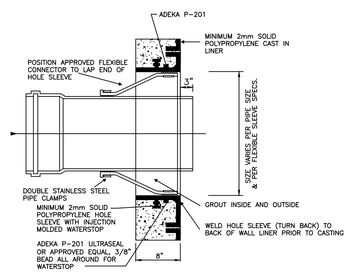

INSTALLATION:
1) CLEAN BOOT HUB
2) INSTALL RUBBER BOOT CONNECTOR (PER MANUFACTURER'S INSTRUCTIONS).
3) LUBRICATE PIPE SPIGOT AND SLIDE INTO RUBBER BOOT CONNECTOR.
4) TIGHTEN RUBBER BOOT CLAMPS (PER MANUFACTURER'S INSTRUCTIONS)
5) SECURE AND BACKFILL WITH PROPER MATERIAL AS SPECIFIED
6) CHECK FOR WATERTIGHT CONNECTION

DO NOT LUBRICATE THE BOOT CONNECTOR OR THE BOOT HUB

NOTES:
1) MANHOLE SHOP DRAWINGS SHALL IDENTIFY THE TYPE OF MANHOLE/PIPE CONNECTION.
2) MANHOLE SHOP DRAWINGS SHALL IDENTIFY THE PIPE SIZE, TYPE, GASKET TYPE, AND HOLE SIZE.
3) ONLY THE POLYISOPRENE GASKET SUPPLIED BY THE BELL MANUFACTURER SHALL BE USED IN COMPRESSION TYPE BELLS.
4) GASKET GLAND VARIES ACCORDING TO PIPE SIZE AND TYPE.
5) HOLE SLEEVES AND BELL CONNECTORS SHALL EXTEND TO THE OUTER PROFILE OF THE CONCRETE STRUCTURE AT MINIMUM PROVIDING A COMPLETELY LINED SURFACE WHERE THE GASKET AND HOLE LINER MATE TOGETHER.

TURN BACK BOOT HUB WITH BOOT CONNECTOR

PIPE TO MANHOLE CONNECTION – TYPE "C" 23S

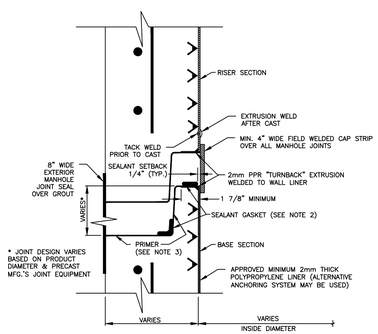

NOTES:

1. LINER WELDING SHALL BE PERFORMED EXCLUSIVELY BY LICENSED, CERTIFIED WELDERS.
2. STRUCTURE SHOP DRAWINGS SHALL CALL OUT THE SIZE, TYPE AND PLACEMENT OF THE JOINT SEALANT.
3. JOINT PRIMER TO BE APPLIED BY THE PRECASTER (TONGUE SECTION ONLY).

TURN BACK JOINT INSTALLED PRIOR TO CAST 27S

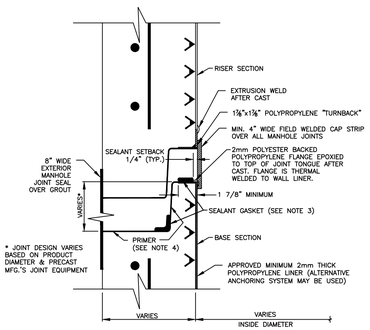

NOTES:

1. THE "AFTER CAST" "TURNBACK" JOINT IS USED WHEN THE "PRIOR TO CAST" "TURNBACK" JOINT IS NOT FEASIBLE.
2. LINER WELDING SHALL BE PERFORMED EXCLUSIVELY BY LICENSED, CERTIFIED WELDERS.
3. STRUCTURE SHOP DRAWINGS SHALL CALL OUT THE SIZE, TYPE AND PLACEMENT OF THE JOINT SEALANT.
4. JOINT PRIMER TO BE APPLIED BY THE PRECASTER (TONGUE SECTION ONLY).

TURN BACK JOINT INSTALLED AFTER CAST 28S

IT'S THE LAW !
CALL 48 HOURS BEFORE YOU DIG
1-800-432 4770
SUNSHINE STATE ONE CALL OF FLORIDA, INC.
UTILITIES NOTIFICATION CENTER

WASTEWATER #3
STANDARD DETAILS

CONSULTANT:

DESIGNED BY: WUD
DRAWN BY: WUD CADD
CHECKED BY: A. GALICKI
APPROVED BY: WUD

Palm Beach County
Water Utilities Department
P.O.Box 16097
West Palm Beach, FL 33416-6097

PROJECT NO.
00-000

PROJECT NAME

PALM BEACH COUNTY
WATER UTILITIES DEPARTMENT
P.O. BOX 16097
WEST PALM BEACH, FL 33416
(561)493-6000

NO.	DATE	REVISION / REMARKS	BY
	FEB. 2015	GENERAL REVISION	A.G.

STD DETAILS

SHEET NUMBER
0
OF
0

SEAL

May 20, 2016